5.9 Three-Phase to Single-Phase Cyclo converters

- A three-phase to single phase cyclo converter also consists of positive and negative group thyristors. Positive converters will provide positive current and negative converters will provide negative current to the load.
- .These cyclo-converters can be half-wave or full bridge converters as shown in figure. Like single phase cyclo-converters, these also produce a rectified voltage at the load terminals by each group of thyristors.
- At any time, one converter will operate. The circuit of half wave and full wave cycloconverters are shown below.

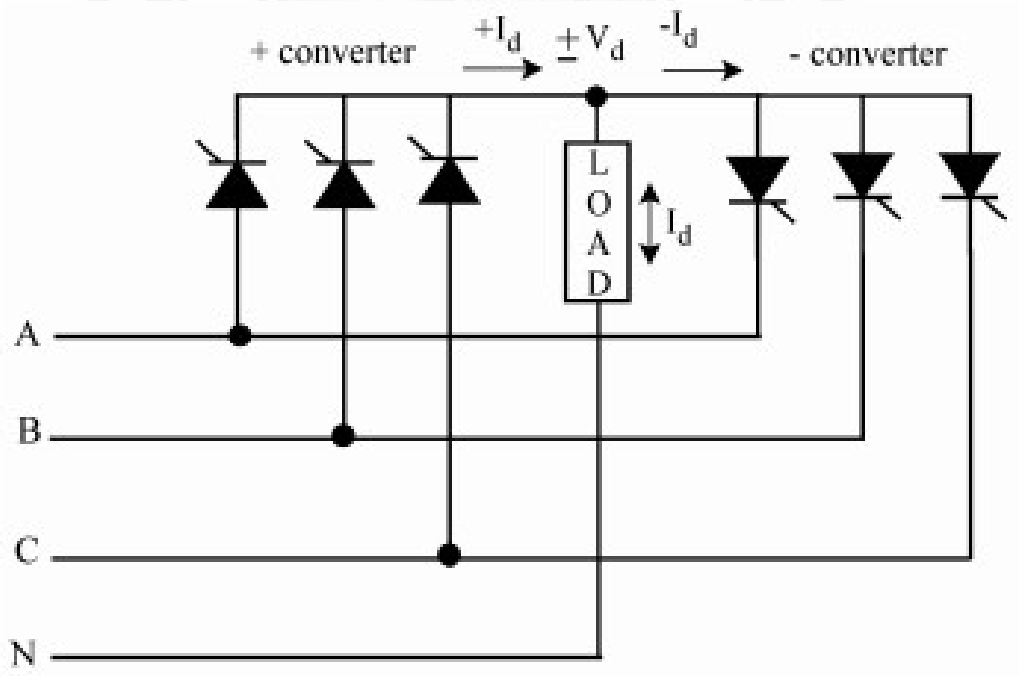

Figure 5.9.1 3phase cyclo converter

[Source: "Power Electronics" *by* P.S.Bimbra*,* Khanna Publishers *Page: 418]*

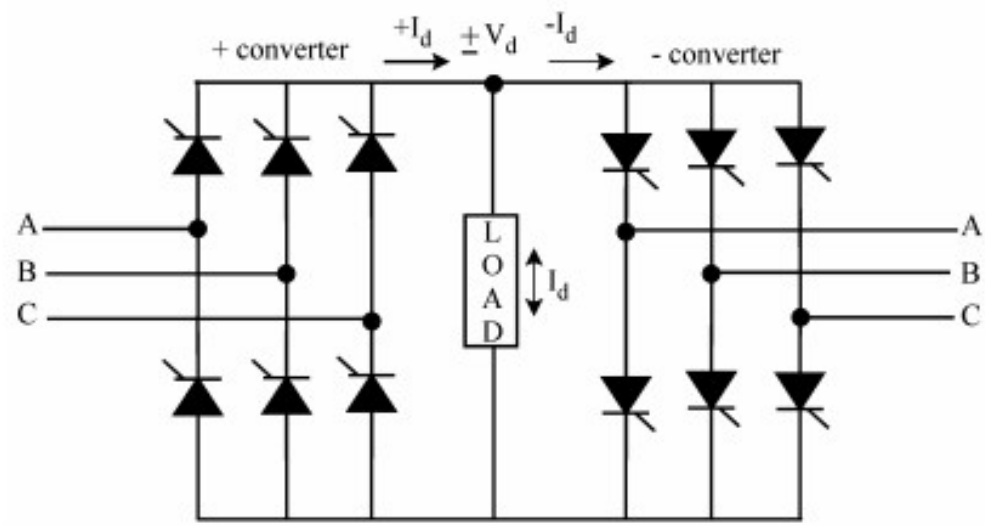

Figure 5.9.2 3phase to single phase cyclo converter

[Source: "Power Electronics" *by* P.S.Bimbra*,* Khanna Publishers *Page: 418]*

During positive half cycle of the input, conduction of the positive group thyristors is controlled and during negative half-cycle, conduction of negative group of thyristors is controlled in order to produce an output voltage at desired frequency.

OPERATION

The firing angle (α) of two converters is first decreased starting from the initial value of 90° to the final value of 0°, and then again increased to the final value of 90° , as shown in Fig. below Also, for positive half cycle of the output voltage waveforrn, bridge 1 is used, while bridge 2 is used for negative half cycle. The two half cycles are combined to form one complete cycle of the output voltage, the frequency being decided by the number of half cycles of input voltage waveform used for each half cycle of the output. As more no. of segments of near 60°(π/6} is used, the output voltage waveform becomes near sinusoidal, with its frequency also being reduced.

The initial value of firing angle delay is kept at $\alpha_1 \approx 90°$, such the average value (dc) of the output voltage in this interval of near 60° (π/6) [Vav= cos α_1 = cos 90°= 0, is zero. It may be noted that the next thyristor in sequence is triggered at $\alpha_2 < 90°$, as the firing angle is decreased for each segment, to obtain higher voltage Vavα cos α_2 = +ve , to form the sine waveat the output. This can beobserved from the points, M, N, O, P, Q, R & S, shown in Fig.From these segments, the first quarter cycle of the output voltage waveform from 0° to 90°, is obtained. The second quarter cycle of the above waveform from 90°to180° , is obtained, using the segments starting from the points, T, U, V, W, X &Y. It may be noted that the firing angle delay at the point, Y is α = 90° , and also the firing angle is increased from 0° (T) to 90° (Y) in this interval. When the firing angle delay is 0° , the average value of the segment is Vav α cos α= cos 0° = 1.0. The two quarter cycles form the positive half cycle of the output voltage waveform. In this region, the bridge l (positive) is used.

- To obtain the negative half cycle of the output voltage waveform (180° - 360°), the other bridge converter (#2) termed negative (B) is used in the same manner as given earlier, i.e. its firing angle delay ((1) is first decreased starting from the initial value of 90° to the final value of 0° , and then again increased to the finalvalue of 90°.the two half cycles together form the complete cycle of the output voltage waveform.

- In a bridge type of cyclo-converter, both positive and negative converters can generate voltages at either polarity, but negative converter only supplies negative current while positive converter supply positive current.

- Therefore, the cyclo-converter can operate in four quadrants, i.e., rectification modes of (+V, +i) and (-V, -i) and inversion modes of (+V, -i) and (-V, +i)

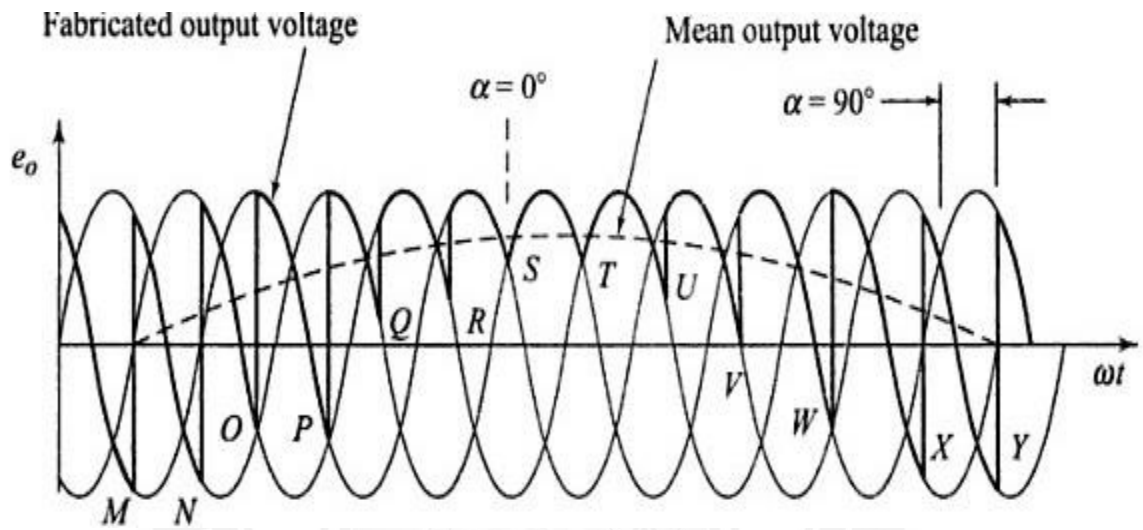

Figure 5.9.3 Output Voltage form

[Source: "Power Electronics" *by* P.S.Bimbra*,* Khanna Publishers *Page: 419]*

The above figure shows the conversion of three phase supply at one frequency to single phase supply of lower frequency. In this, the firing angle to a positive group of thyristors is varied progressively to produce single phase output voltage.

- At point M, the firing angle is 90 degrees and it is reduced till point S where it is zero. Again from point T to Y, the delay angle is progressively increased.

- This varied triggering signals to the thyristors, varies its conduction time periods and hence the frequency of the output voltage.