5.5 LINEAR REGULATORS

- All electronic circuits need a dc power supply for their operation. To obtain this dc voltage from 230 V ac mains supply, we need to use rectifier.
- Therefore the filters are used to obtain a “steady” dc voltage from the pulsating one.
- The filtered dc voltage is then applied to a regulator which will try to keep the dc output voltage constant in the event of voltage fluctuations or load variation.

The combination of rectifier & filter can produce a dc voltage. But the problem with this type of dc power supply is that its output voltage will not remain constant in the event of fluctuations in an AC input or changes in the load current(IL).

- The output of unregulated power supply is connected at the input of voltage regulator circuit.
- The voltage regulator is a specially designed circuit to keep the output voltage constant. It does not remain exactly constant. It changes slightly due to changes in certain parameters.

Factors affecting the output voltage:

i) I_L (Load Current)

ii) V_{IN} (Input Voltage)

iii) T (Temperature)

IC VOLTAGE REGULATORS

They are basically series regulators.

Important features of IC Regulators:

1. Programmable output
2. Facility to boost the voltage/current
3. Internally provided short circuit current limiting
4. Thermal shutdown

5. Floating operation to facilitate higher voltage output

Classifications of IC voltage regulators:

a. Fixed Volt Reg. Positive/negative

b. Adjustable O/P Volt Reg

c. Switching Reg

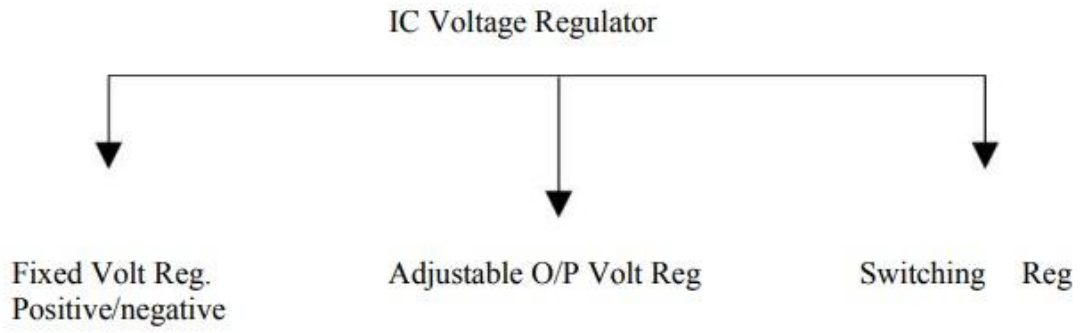

- Fixed & Adjustable output Voltage Regulators are known as Linear Regulator.
- A series pass transistor is used and it operates always in its active region.

SWITCHING REGULATOR

1. Series Pass Transistor acts as a switch.
2. The amount of power dissipation in it decreases considerably.
3. Power saving result is higher efficiency compared to that of linear.

ADJUSTABLE VOLTAGE REGULATOR

Advantages of Adjustable Voltage Regulator over fixed voltage regulator are,

1. Adjustable output voltage from 1.2v to 57 v
2. Output current 0.10 to 1.5 A
3. Better load & line regulation
4. Improved overload protection
5. Improved reliability under the 100% thermal overloading

ADJUSTABLE POSITIVE VOLTAGE REGULATOR (LM317)

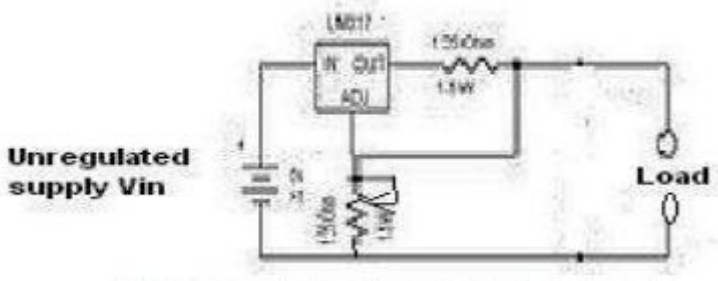

Figure 5.5.1 LM317 Regulator circuit Diagram

[source: https://www.brainkart.com/subject/Linear-Integrated-Circuits_220/]

1. LM317 series adjustable 3 terminal positive voltage regulator, the three terminals are Vin, V_{out} & adjustment (ADJ).Figure 5.5.1.shows the LM317 Regulator circuit.
2. LM317 requires only 2 external resistors to set the output voltage.
3. LM317 produces a voltage of 1.25v between its output & adjustment terminals. This voltage is called as V_{ref}.
4. V_{ref} (Reference Voltage) is a constant, hence current I1 flows through R1 will also be constant. Because resistor R1 sets current I1. It is called "current set" or "program resistor".
5. Resistor R2 is called as "Output set" resistors, hence current through this resistor is the sum of I1 & I_{adj}
6. LM317 is designed in such as that I_{adj} is very small & constant with changes in line voltage & load current.
7. The output voltage Vo is, $V_o=R_1I_1+(I_1+I_{adj})R_2$---------- (1)

Where $I_1= V_{ref}/R_1$

$$V_o = (V_{ref}/R_1)\, R_1 + V_{ref}/R_1 + I_{adj}\, /R_2$$

$$= V_{ref} + (V_{ref}/R_1)\, R_2 + I_{adj}\, R_2$$

$$V_o = V_{ref}\, [1 + R_2/R_1] + I_{adj}\, R_2 \text{---------- (2)}$$

R_1 = Current (I1) set resistor

R_2 = output (Vo) set resistor.

V_{ref} = 1.25v which is a constant voltage between output and ADJ terminals.

- Current I_{adj} is very small. Therefore the second term in (2) can be neglected.
- Thus the final expression for the output voltage is given by

$$Vo = 1.25v[1 + R_2/R_1] \quad \text{----------} \quad (3)$$

Eqn (3) indicates that we can vary the output voltage by varying the resistance R_2. The value of R_1 is normally kept constant at 240 ohms for all practical applications.

PRACTICAL REGULATOR USING LM317

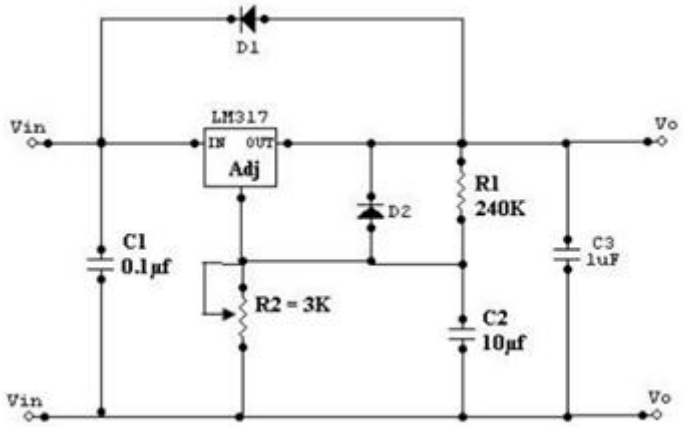

Figure 5.5.2 Practical Regulator

[source: https://www.brainkart.com/subject/Linear-Integrated-Circuits_220/]

- Practical Regulator is shown in figure 5.5.2.If LM317 is far away from the input power supply, then 0.1µf disc type or 1µf tantalum capacitor should be used at the input of LM317.
- The output capacitor Co is optional. Co should be in the range of 1 to 1000µf.
- The adjustment terminal is bypassed with a capacitor C2 this will improve the ripple
- rejection ratio as high as 80 dB is obtainable at any output level.
- When the filter capacitor is used, it is necessary to use the protective diodes.
- These diodes do not allow the capacitor C2 to discharge through the low current point of the regulator.
- These diodes are required only for high output voltages (above 25v) & for higher values of output capacitance 25µf and above.