5.8 Single phase to Single phase Cyclo converter

It consists of back to back connected controlled rectifiers whose output voltage and frequency can be controlled by tuning firing angles of rectifiers. With respect to the connection of rectifiers, its structure can comprise of half-wave or full-wave bridge.

- It consists of two full-wave, fully controlled bridge thyristors, where each bridge has4 thyristors, and each bridge is connected in opposite direction (back to back) such that both positive and negative voltages can be obtained as shown in figure below. Both these bridges are excited by single phase, 50 Hz AC supply.

- Bridge 1- +ve group converter supplies load current in the +ve half of the output cycle and bridge 2 -ve group converter supplies load current in the negative half of the output cycle.

- The two bridges should not conduct together as this will produce a short circuit at the output.

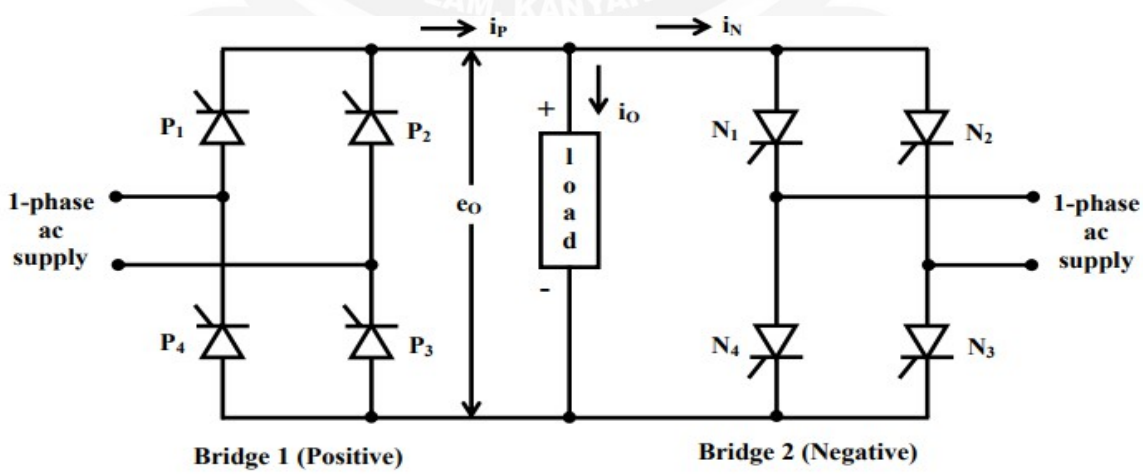

Figure 5.8.1 Single phase bridge type cyclo converter

[Source: "Power Electronics" *by* P.S.Bimbra*,* Khanna Publishers *Page: 415]*

OPERATION

MODE-1 : To get Positive half cycle of Output Voltage

- During positive half cycle of the input voltage, positive converter (bridge-1) is turned ON and it supplies the load current. During the +ve half cycle, 0 to π ,SCR P1 & P3 are forward biased and are triggered at ωt=α. Then P1 & P3 are on state & the output is positive. The current flows from V+-P1-R-P3-V-. at ωt=π, P1 & P2 are turned off. It rectifies the input voltage and produce unidirectional output voltage as we can observe four positive half cycles .

- During negative half cycle of the input, negative bridge is turned ON and it supplies load current. During –ve half of the cycle, π to 2π, SCR P3 & P4 are forward biased and is triggered at ωt=π+α. Then P2 & P4 are in on state. Again the output voltage & current is positive. Current flow is through V+-P3-R-P4-V-. at ωt=2π , SCR P2 & P4 are turned off due to natural commutation.

- Both converters should not conduct together that cause short circuit at the input.To avoid this, triggering to thyristors of bridge-2 is inhibited during positive half cycle of load current, while triggering is applied to the thyristors of bridge-1 at their gates. During negative half cycle of load current, triggering to positive bridge is inhibited while applying triggering to negative bridge.

- By controlling the switching period of thyristors, time periods of both positive and negative half cycles are changed and hence the frequency. This frequency of fundamental output voltage can be easily reduced in steps, i.e., 1/2, 1/3, 1/4 and so on.

MODE-2: To get Negative half cycle of Output Voltage

- Now bridge 2 can be operated and the output is negative. During +ve half cycle 2π to 3π, SCR N1 & N3 are forward biased. It is triggered at ωt=2π+ α. Then it comes to on state. The current flows through B-N1-R-N3-C. the output voltage & current is negative. At ωt=3π SCR N1 & N3 are turned off due to natural commutation.

- During negative half cycle 3π to 4π, SCR N2 & N4 are forward biased. It is triggered at ωt=3π+α. Then it comes to on state. The current flows through C-N3-R-N4-B. now negative voltage & current is got as the output. At ωt=4π, SCR N2 & N4 are turned off due to natural commutation.

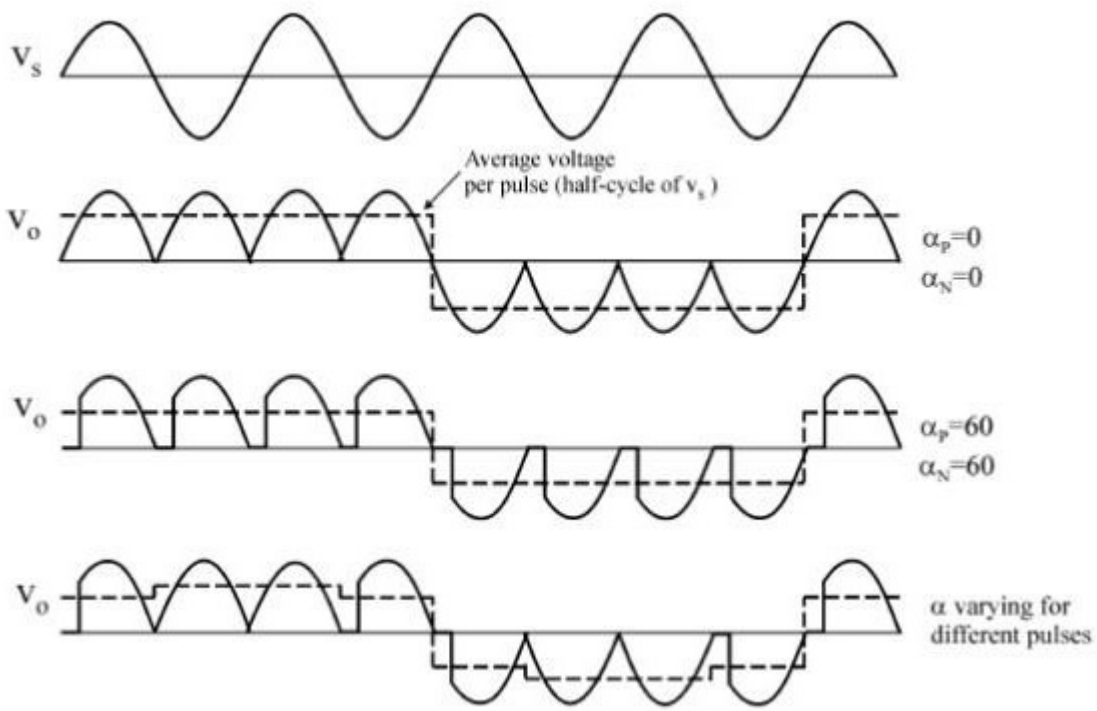

Figure 5.8.2 Wave forms of cyclo converter

[Source: "Power Electronics" *by* P.S.Bimbra, Khanna Publishers *Page: 416]*