3.7 BUCK -BOOST CONVERTER

- **Buck Boost converter** which can operate as a DC-DC Step-Down converter or a DC-DC Step-Up converter depending upon the duty cycle.

A typical Buck-Boost converter is shown below

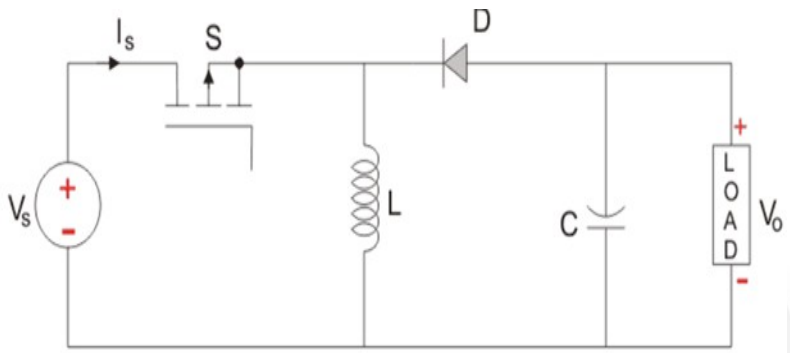

Figure 3.7.1 Buck- Boost converter circuit diagram

[Source: "Power Electronics" *by* P.S.Bimbra*,* Khanna Publishers *Page: 282]*

- The input voltage source is connected to a solid state device. The second switch used is a diode. The diode is connected, in reverse to the direction of power flow from source, to a capacitor and the load and the two are connected in parallel as shown in the figure above.

- The controlled switch is turned on and off by using Pulse Width Modulation (PWM). PWM can be time based or frequency based. Frequency based modulation has disadvantages like a wide range of frequencies to achieve the desired control of the switch which in turn will give the desired output voltage. Time based Modulation is mostly used for DC-DC converters. It is simple to construct and use. The frequency remains constant in this type of PWM modulation.

The Buck Boost converter has two modes of operation.

MODE I : SWITCH IS ON, DIODE IS OFF

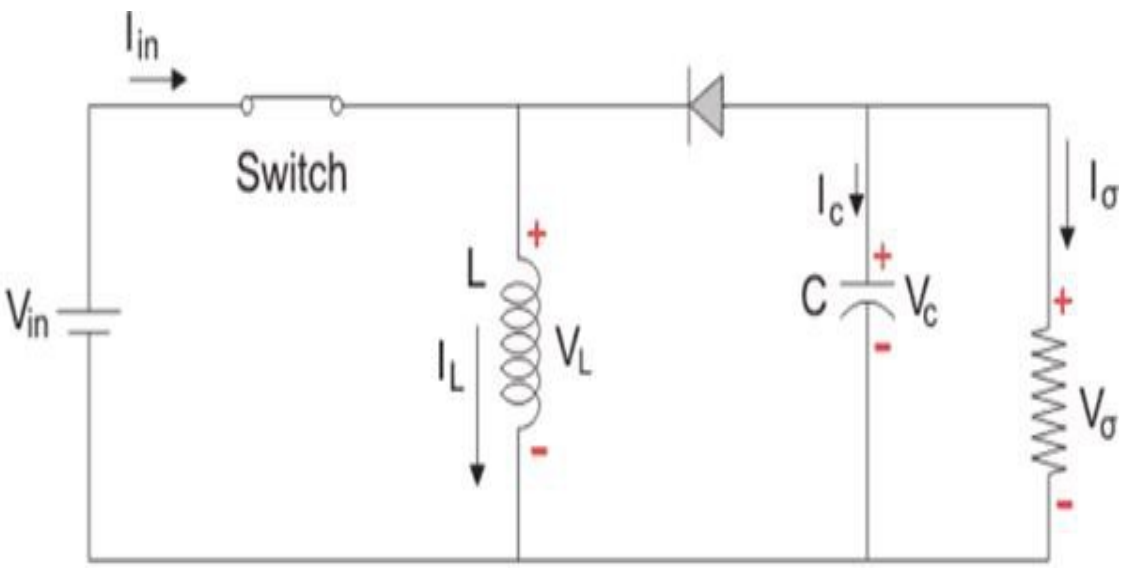

Figure 3.7.2 Buck- Boost converter- Mode I circuit

[Source: "Power Electronics" *by* P.S.Bimbra*,* Khanna Publishers *Page: 283]*

- The Switch is ON and therefore represents a short circuit ideally offering zero resistance to the flow of current so when the switch is ON all the current will flow through the switch and the inductor and back to the DC input source. The inductor stores charge during the time the switch is ON and when the solid state switch is OFF the polarity of the Inductor reverses so that current flows through the load and through the diode and back to the inductor.
- So the direction of current through the inductor remains the same.

MODE II : SWITCH IS OFF, DIODE IS ON

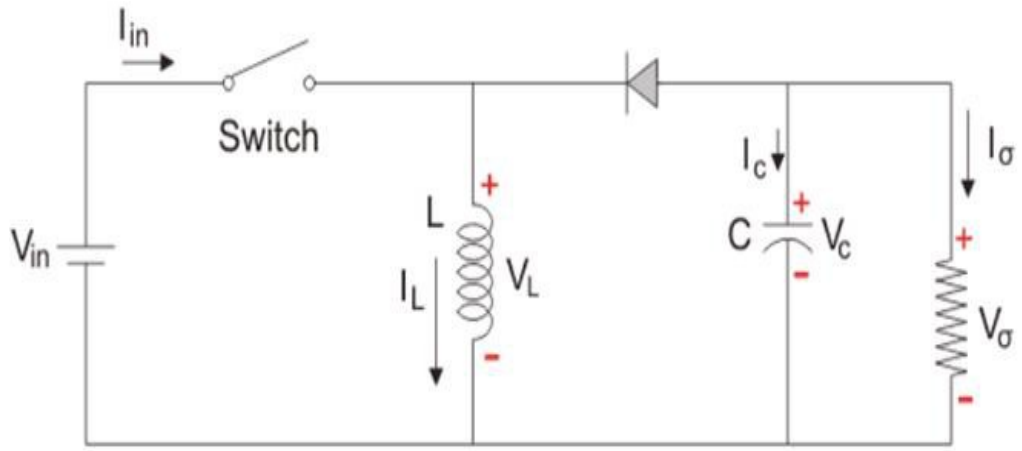

Figure 3.7.3 Buck- Boost converter- Mode II circuit diagram

[Source: "Power Electronics" *by* P.S.Bimbra*,* Khanna Publishers *Page: 283]*

In this mode the polarity of the inductor is reversed and the energy stored in the inductor is released and is ultimately dissipated in the load resistance and this helps to maintain the flow of current in the same direction through the load and also step-up the output voltage as the inductor is now also acting as a source in conjunction with the input source.